Version:
January 12, 2017

(HR)
Heating Resistors

Token Electronics Industry Co., Ltd.

Taiwan: No.137, Sec. 1, Zhongxing Rd., Wugu District,
New Taipei City, Taiwan, R.O.C. 24872
Tel: +886 2981 0109 Fax: +886 2988 7487

China: 12F, Zhong Xing Industry Bld., Chuang Ye Road,
Nan Shan District, Shen Zhen City,
Guang Dong, China 518054
Tel: +86 755 26055363; Fax: +86 755 26055365

Web: www.token.com.tw

Email: rfq@token.com.tw

Product Introduction

Token Ceramic Thermal Far Infrared Heating Resistors (HR) with Customized Design.

Features :

- Performance and stability, long service life.
- Materials for corrosion-resistant ceramic glaze, a wide range of hand-hygiene requirements are high or corrosive gas environment.
- For the efficient, new home appliances, high efficiency, excellent features, good seismic performance, simple and precise temperature control, energy saving.
- Components of a wide range of baked products, a good drying effect.
- A very good impact resistance voltage capability, high durability.
- Are widely used in industrial production, household appliances, medical equipment.

Token thermal far-infrared radiation ceramic glaze membrane components electric membrane is the introduction of new materials and new technologies produced a new generation of high-temperature membrane electric products, which compared to conventional electric heating elements have an unparalleled advantage.

Contact us with your specific needs. For more information, please link to Token official website "Heat Resistors".

Dimensions

(HR) Dimensions (Unit: mm)

Type	L±3.0	ΦD±2.0	Φd±2.0	B±2.0
HR	250	12	9.5	13
	250	16	12	13
	250	21	17	13
	250	25	19	13

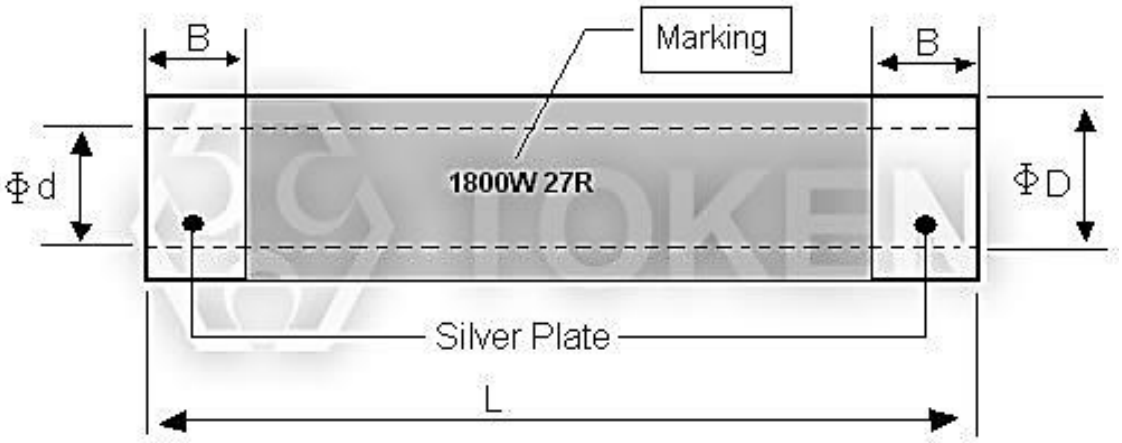

Heating Resistors - HR Series Dimensions

- **Remark: For ΦD=12 Type, the length upon customized request up to 340mm.**
  For ΦD=16, ΦD=21 and ΦD=25 Type, the length upon customized request up to 600mm.
  B: upon request.

Specifications

(HR) Specifications

Type	Resistance Range	Resistance Tolerance	Rated Power	Working Voltage	Operating Temperature
HR	1Ω ~ 10KΩ	K (±10%) M (±20%)	1W ~ 3000W	220V	650℃ Max.

Electrical Specifications

(HR) Electrical Specifications

Parameters	Heat Resistors	GB4654-84GB7287-87
Service life	>10000h	>2000h
Directional radiation	>91%	>83%
Electric radiation conversion rate	>61.5%	50%
Power attenuation	<3%	/
Thermal response time	<4min	20min
Spectral range	2.5-50μm	/
Peak wavelength of radiation power	4.5μm	/
Radiation mode	Directly heater, no thermal heating wire.	/

Advantage Heat Resistors

Advantage Ceramic glaze electric components on film (HR) Heat Resistors

High temperature electric heating element is the use of membrane technology, new materials; new technology developed from a new generation of highly efficient energy-saving electric products, Heat Resistor HR is not a conventional electric heating electric wire, with traditional electric heating of different ways.

Electric high temperature membrane through special technology, a unique formula will be a variety of high temperature chemical element in the growth of high-strength composite ceramic substrate surface conductive heat generated films, and its surface covered in a layer of the far-infrared very thin insulating layer to Strength then its far-infrared radiation, increase the insulation properties and acid and alkali, moisture resistant.

High temperature electric heating elements of the resistance film has a good positive temperature coefficient (PTC) characteristics of long-term use of non-power recession, thus ensuring more than 10,000 hours life of components.

Film high temperature electric heating elements used for high-intensity special ceramic matrix, the high temperature membrane for electric heat source, the maximum temperature up to 800℃ (General Electric film can only work at 300℃ below) so stable performance.

High temperature electric heating elements major film performance indicators have reached or exceeded the international advanced level infrared radiation components.

As high temperature electric heating element is a membrane surface heating elements, with small size, light weight, small thermal inertia, heat a very short response time, the heating elements maximum spectral wavelengths and water, paint, textile and chemical fiber materials absorb infrared wavelength consistent, so heating range.

Far-infrared emission rate of 0.90 for the test, high temperature electric heating elements than the membrane electric wire, electric power saving of more than 30~40 percent.

Order Codes

Heating Resistor (HR) Order Codes

HR	1800	B	27Ω	K	220V	450C	S	Black
Product Type	Power Rating	Type A Quartz B Ceramic	Resistance Value	Resistance Tolerance K ±10%	Working Voltage	Operating Temperature	Silver plate terminal	Color