Version:
January 13, 2017

(TCB5FL) Common Mode RF Baluns Transformer

Token Electronics Industry Co., Ltd.

Taiwan: No.137, Sec. 1, Zhongxing Rd., Wugu District,
New Taipei City, Taiwan, R.O.C. 24872
Tel: +886 2981 0109 Fax: +886 2988 7487

China: 12F, Zhong Xing Industry Bld., Chuang Ye Road,
Nan Shan District, Shen Zhen City,
Guang Dong, China 518054
Tel: +86 755 26055363; Fax: +86 755 26055365

Web: www.token.com.tw

Email: rfq@token.com.tw

Product Introduction

A Balun is a device which converts balanced impedance to unbalanced and vice versa.

Features :

- Pair wire coil for high stability.

Applications :

- Double Balance Mixers, Broad-Band Transformers;
- Impedance Transformers, Balun Transformers.

Token utilizes the latest winding technology using paired wires for high uniformity and enabling the most cost-effective designs in manufacturing surface mount baluns.

Token (TCB5FL) baluns are primarily designed for choking power lines and conform to the RoHS compliant and Lead-free. SMD (TCB5FL) feature with ultra-compact size, wide inductance selection, and low-resistance coils. SMD (TCB5FL) can be customed designs and tighter tolerances available on request.

Application of RF balun transformer specific designs also available including different inductance values and Q specifications adjusted to frequency requirements. Base pins are end processed to allow direct mounting on PCB. Ideal for use in double balanced mixers, and as broad band transformers, transistors and for impedance conversion.

Token will also produce devices outside these specifications to meet customer requirements, with comprehensive application engineering and design support available for customers worldwide, please contact our sales or link to Token official website "RF transformers" for more information.

Configurations & Dimensions

Configurations & Dimensions (TCB5FL)

Type	A (max)	B (max)	C (max)	D	E	F	G	H	I
TCB5FL	6.9	6.9	3.6	4.0	5-0.6	5.7	1.7	1.2	4.0

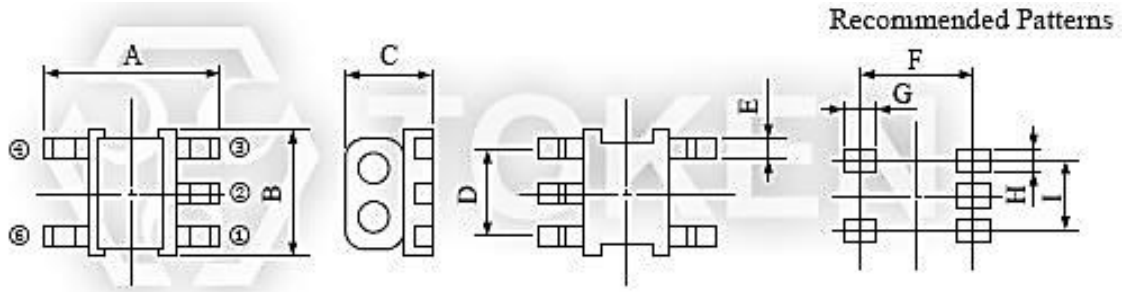

Common Mode Surface Mount Balun Transformers (TCB5FL) Dimensions

- **Note: Design as Customer's Requested Specifications.**

TCB5FL Characteristics

Electrical Characteristics (TCB5FL)

Part Number	Winding Turns 1-6=2-4=2-6=3-4	µiac
TCB5FL - 616DB1196	2 1/2 T	300
TCB5FL - 616DB1197	3 1/2 T	300
TCB5FL - 616DB1198	4 1/2 T	300

Test Circuit (TCB5FL)

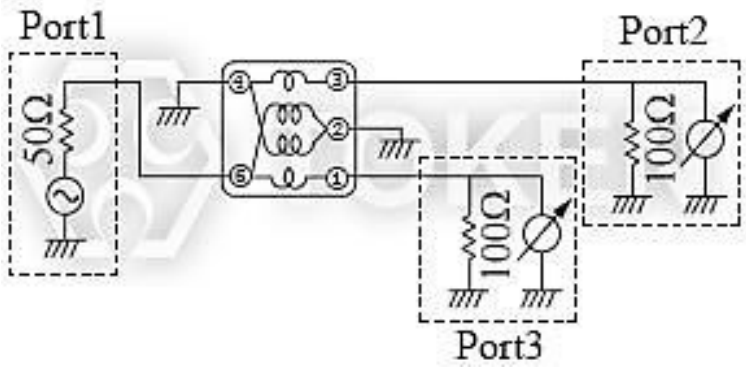

SMD Balun Transformer (TCB5FL) Test Circuit

Typical Characteristics (TCB5FL)

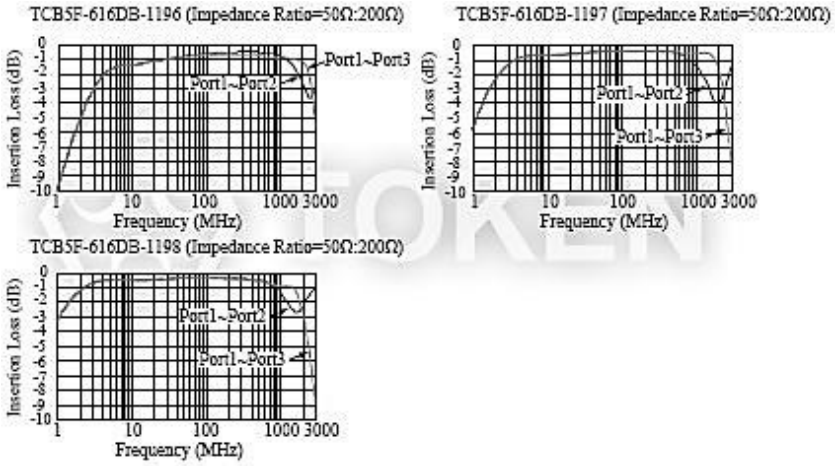

SMD Balun Transformers (TCB5FL) Typical Characteristics

Order Codes

Order Codes (TCB5FL)

TCB5F	-	616DB1196

Part Number
TCB5FL

Type	
616DB1196	Frequency Mixer
616DB1197	Frequency Mixer

General Information

Applications of Baluns

In a **RF balun transformer**, one pair of terminals is balanced, that is, the currents are equal in magnitude and opposite in phase. The other pair of terminals is unbalanced; one side is connected to electrical ground and the other carries the signal. Balun transformers can be used between various parts of a wireless or cable communications system. Some common applications denotes as following:

- Television receiver (Balanced) - coaxial cable network or Coaxial antenna system (Unbalanced)
- FM broadcast receiver (Balanced) - Coaxial antenna system (Unbalanced)
- Dipole antenna (Balanced) - Coaxial transmission line (Unbalanced)
- Parallel-wire transmission line (Balanced) - Coaxial transmitter output, or Coaxial receiver input (Unbalanced)

Token's baluns provide impedance transformation in addition to conversion between balanced and unbalanced signal modes. Most television and FM broadcast receivers are designed for 300-ohm balanced systems, while coaxial cables have characteristic impedances of 50 or 75 ohms. Impedance-transformer baluns with larger ratios are available and used to match high-impedance balanced antennas to low-impedance unbalanced wireless receivers, transmitters, or transceivers.